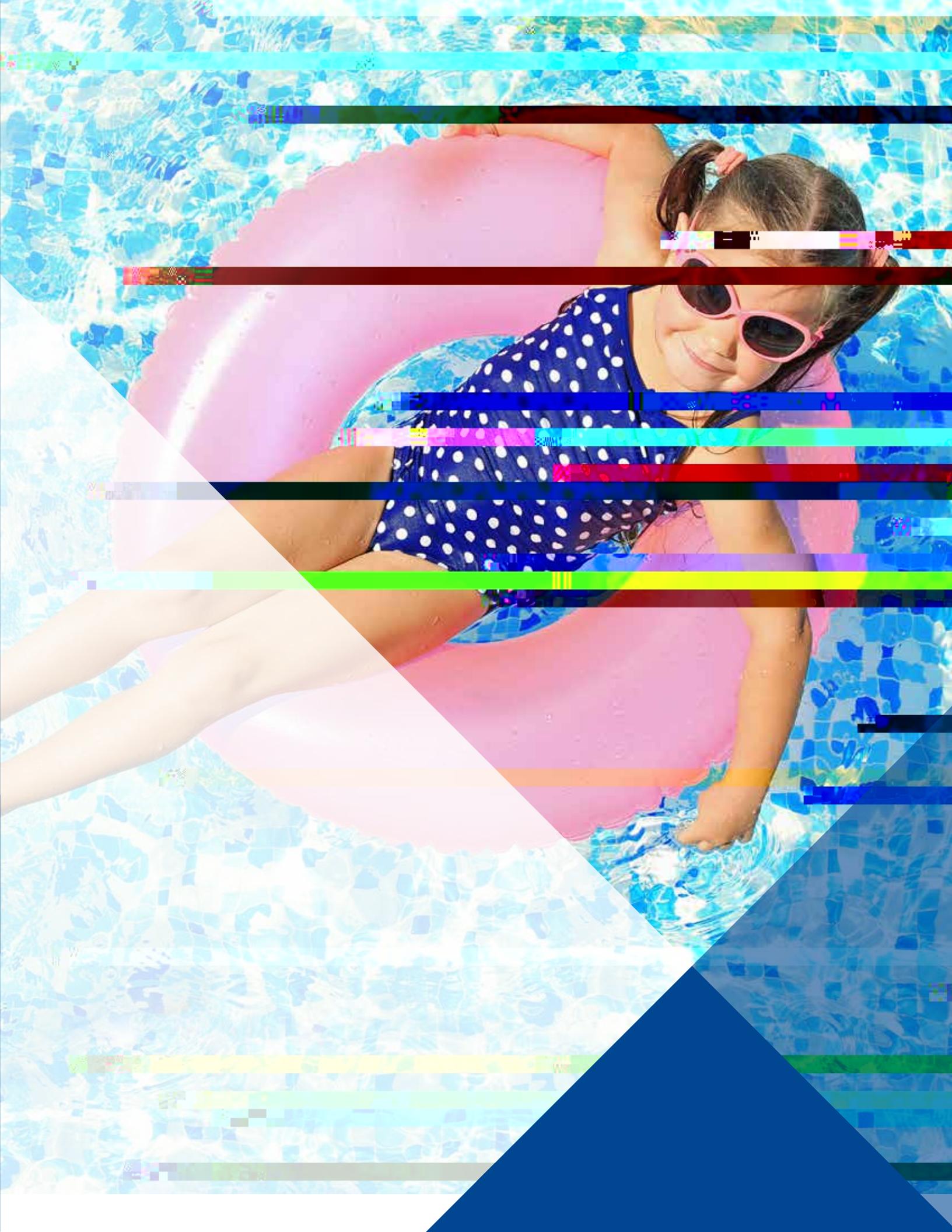

PENTAIR

THE BATTLE IS MEASURABLE

ōІĮĊëŲĮōňńd ĎŁĎĄŲũōňŬ ŤōƑ Ąň ë ŇĎëŬŵũëăŁĎ

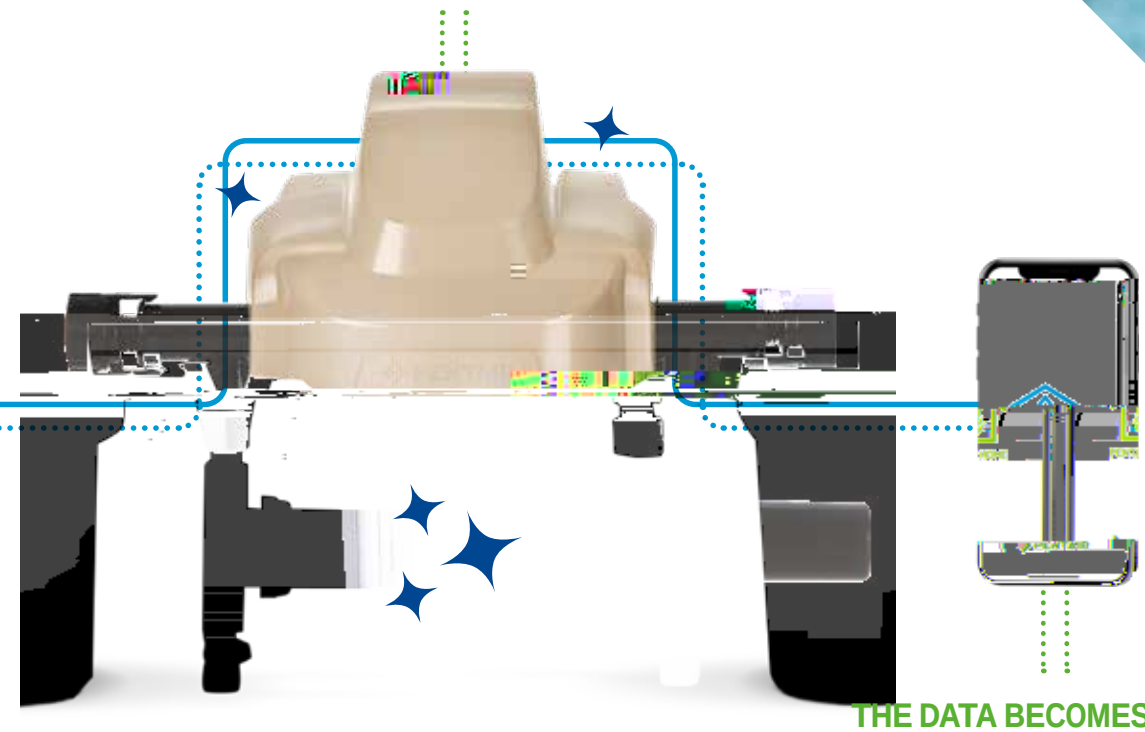

THE DATA BECOMES ACTION