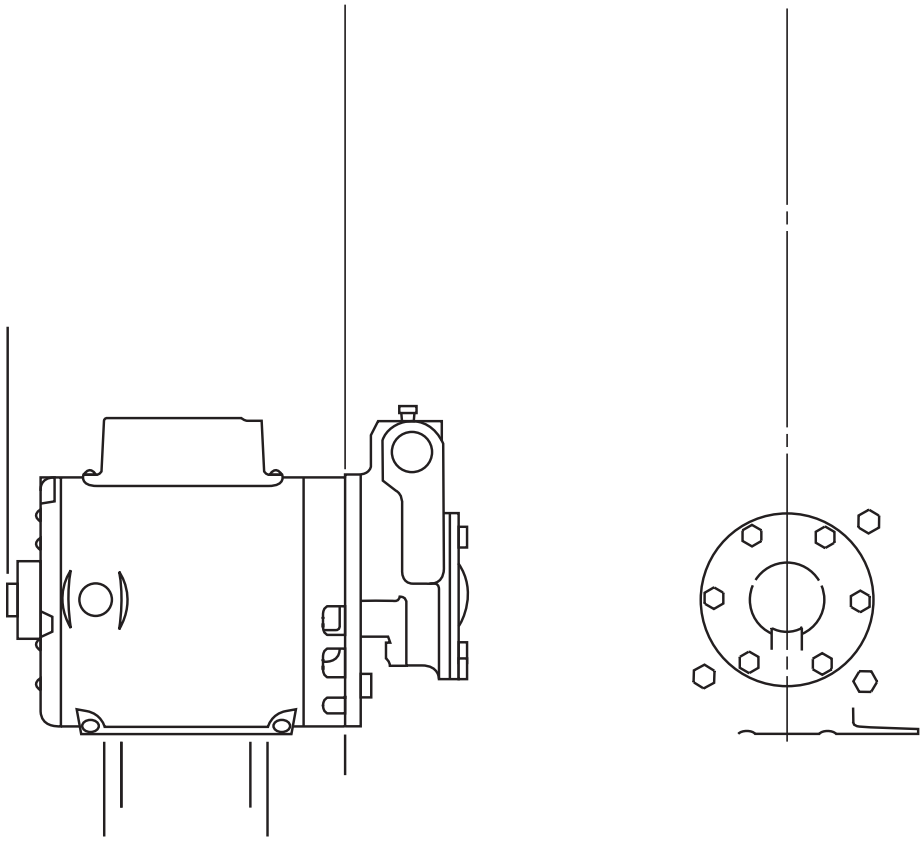

2013 Pentair Ltd.

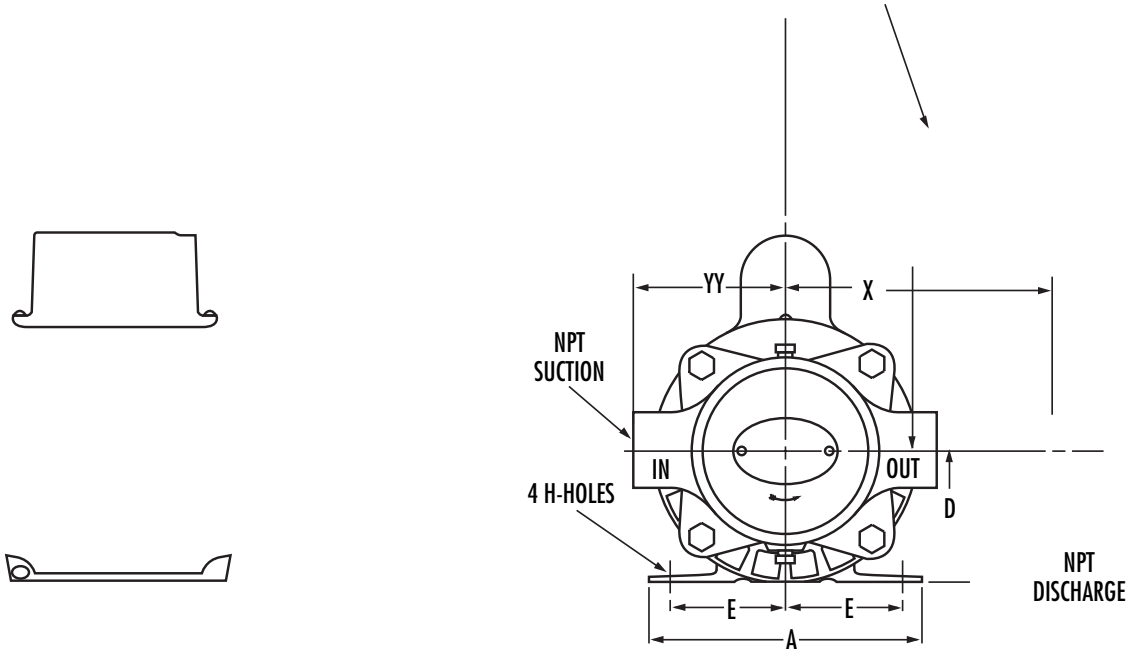
YY
X
NPT
SUCTION
IN
OUT
4 H-HOLES
D
NPT
DISCHARGE
E
E
A

PUMP MODEL	E6T	F6T
RELIEF VALVE SIZE	1	1

THIS PAGE LEFT INTENTIONALLY BLANK

© 2013 Pentair Ltd.

JOCKE P MPS	LOCA ION FOR C R ES
933, 934, 935	( ) 130 133 3, 3, 3, 4, 4, 5 5, 5, 5, 5, 5

THIS PAGE LEFT INTENTIONALLY BLANK